SHARK®

PROFESSIONAL ACCESSORIES

SHARK Snow Plow

52“ (132 cm) / 60“ (152 cm)

Complete system blade

INSTRUCTIONS / ESTABLISHMENT



OPERATING INSTRUCTIONS

Congratulations! You've just purchased the most durable plow system in the industry. The SHARK Complete Plow System works great for all types of plowing. With proper care and maintenance, your plow system will last for years to come! The SHARK Complete Plow system attaches to your ATV using Universal Adapter system, which allows you to push snow or landscape materials. It is designed to fit most models with 350cc or larger engines. The blade pivot design allows the operator to select multiple angled left-or-right positions, and also incorporates a spring-loaded 'trip' system that allows the blade to handle impacts with small obstructions.

Specifications		
SAHRK 60"	width 1 524 mm	height 53,3 cm
SHARK 52"	width 1 315 mm	height 48 cm

COMPLETENESS

The SHARK Complete Plow System includes these components:

- Shark 60" (152.4 cm) or 52" (131,5 cm)
- Universal Adapter Shark
- Universal Mounting Kit Shark

Plow operation requires an additional component for operation:
Winch Kit, Electric Lift or Manual Lift *
**These components may be specific to your vehicle.*

PUSH TUBE ENGAGEMENT: Place push tube under the ATV as shown and insert into the left and right channels of the assembled Forward Mount Weldment, Item #1. Fasten the push tube to the mount with supplied lock pins, Item #26.

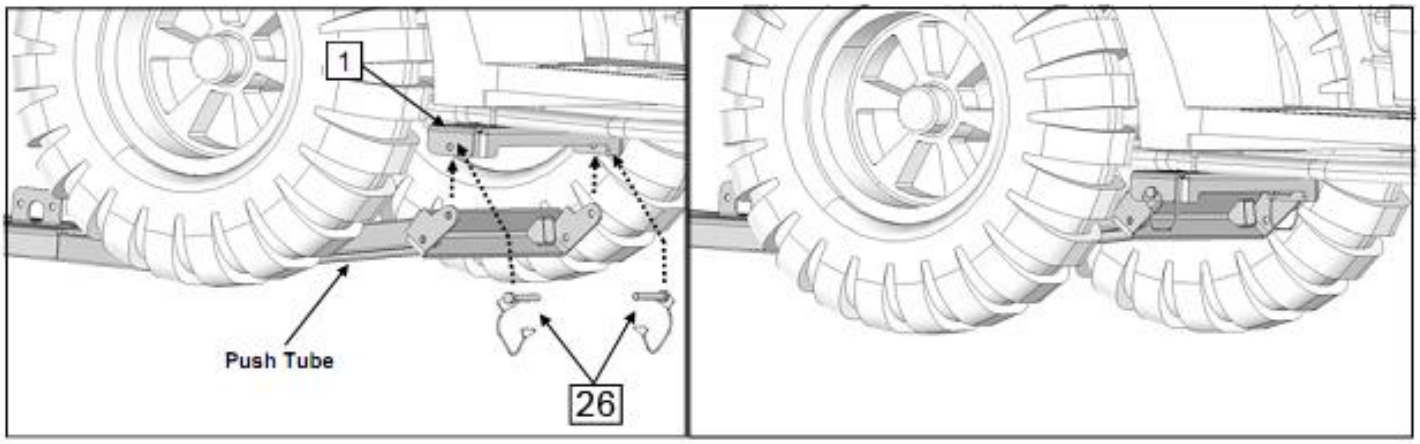

Please read and understand all assembly instructions, notices and warnings before assembling and operating your plow system.

Follow these guidelines to ensure satisfactory operation:

- Read this manual and your ATV operators manual before use.
- Periodically check for wear and tightness of all fasteners. Replace or re-torque fasteners as necessary.
- Before first use, set plow in the furthest right or left angled position to check for clearance between the plow and front tires.
- Operate with extreme caution on slopes and rough terrain. Be familiar with the area before you plow.
- Be aware of immovable objects that could be hidden in the area you are plowing.
- To avoid damage when pushing snow into a pile, reverse direction before raising the plow blade.
- Do not ram the plow blade into piles of snow.
- For best results, set the suspension preload of your ATV to the stiffest setting.
- To reduce steering effort and increase mobility, set the air pressure of your tires to the maximum pressure specification.
- The plow blade assembly is designed to “trip” when it strikes an object or digs in too far. When pressure is released, the plow springs back into position. *Spring tension can be increased by tightening the locknuts on the bottom of the eyebolts. For less spring tension, loosen the locknuts.*
- The plow skids are adjustable. General skid setting is even with the plow wear bar bottom edge, higher settings reduce the chance of rocks and gravel from being collected. *See Page 8 for more information.*
- To increase traction during plow operation, operators can try: Securing weight to the ATV for additional tire downforce, reducing tire air pressure, or installing tire chains.

SAFETY INFORMATION

Our plow systems were designed with your safety in mind. Please read and understand all Cautions, Notices and Warnings in this manual before you begin. In order to protect you and your ATV, certain parts of the plow system and/or hardware are designed to fail when the equipment is over-stressed.

⚠ WARNING

To avoid personal injury or damage to your vehicle:

Do not exceed 5 mph (8 kph) with the blade installed

Be aware that vehicle ground clearance is reduced with plow system installed
Keep yourself, other people and pets away from the blade and moving parts during operation
Before adjusting blade angle or disconnecting the plow system, stop the ATV engine and set the parking brake. Remove your plow system before trail riding

Do not install forward mount system over plastic guard components, which can compress over time and loosen the installation, resulting in poor product performance and/or damage to the ATV.

Do not allow forward mount system to interfere with ATV operational items such as brake lines, coolant hoses, control cables, steering or any other function.

SNOW PLOW ASSEMBLY

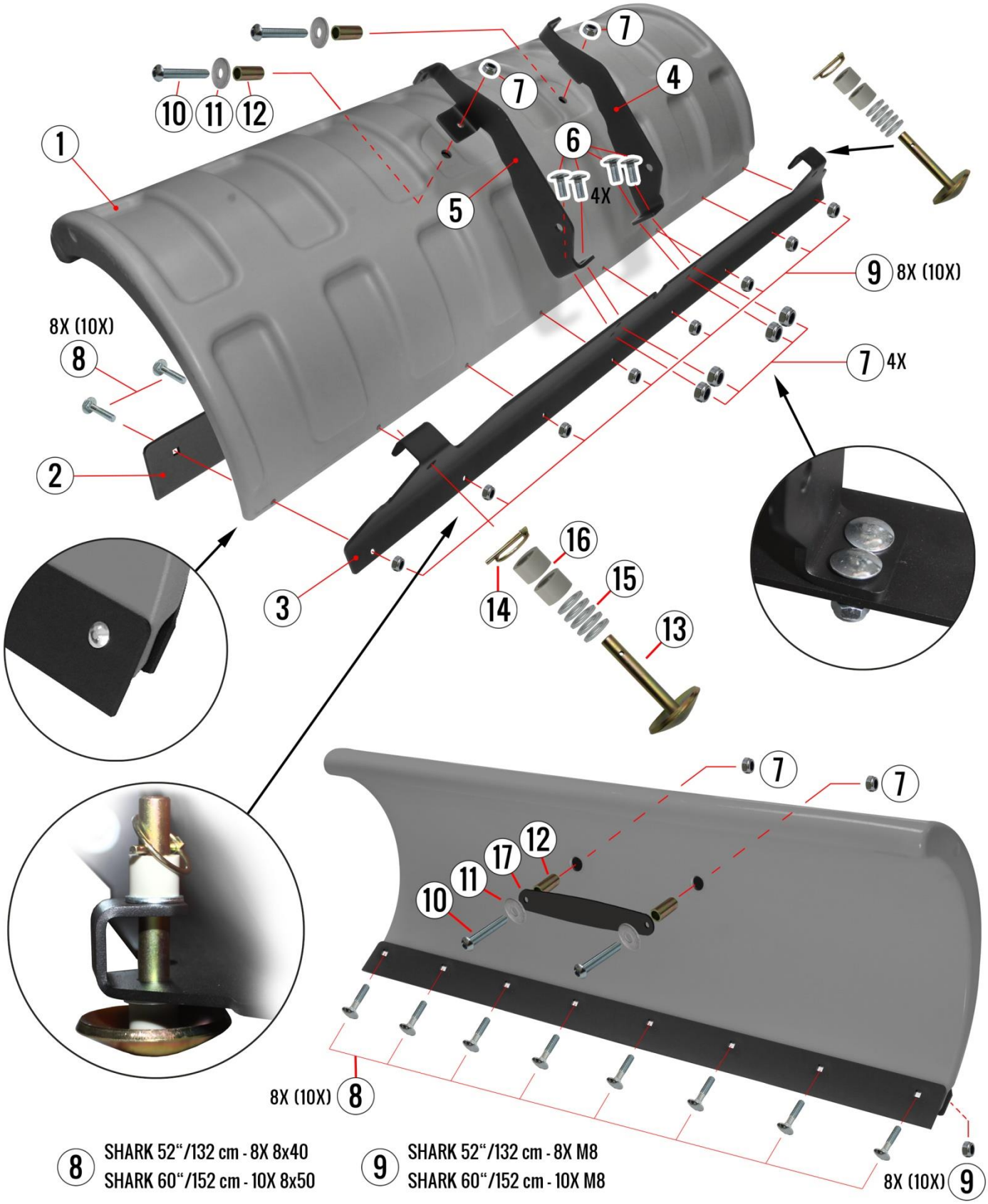

8 SHARK 52“/132 cm - 8X 8x40
SHARK 60“/152 cm - 10X 8x50

9 SHARK 52“/132 cm - 8X M8
SHARK 60“/152 cm - 10X M8

LIST OF MOUNTING HARDWARE

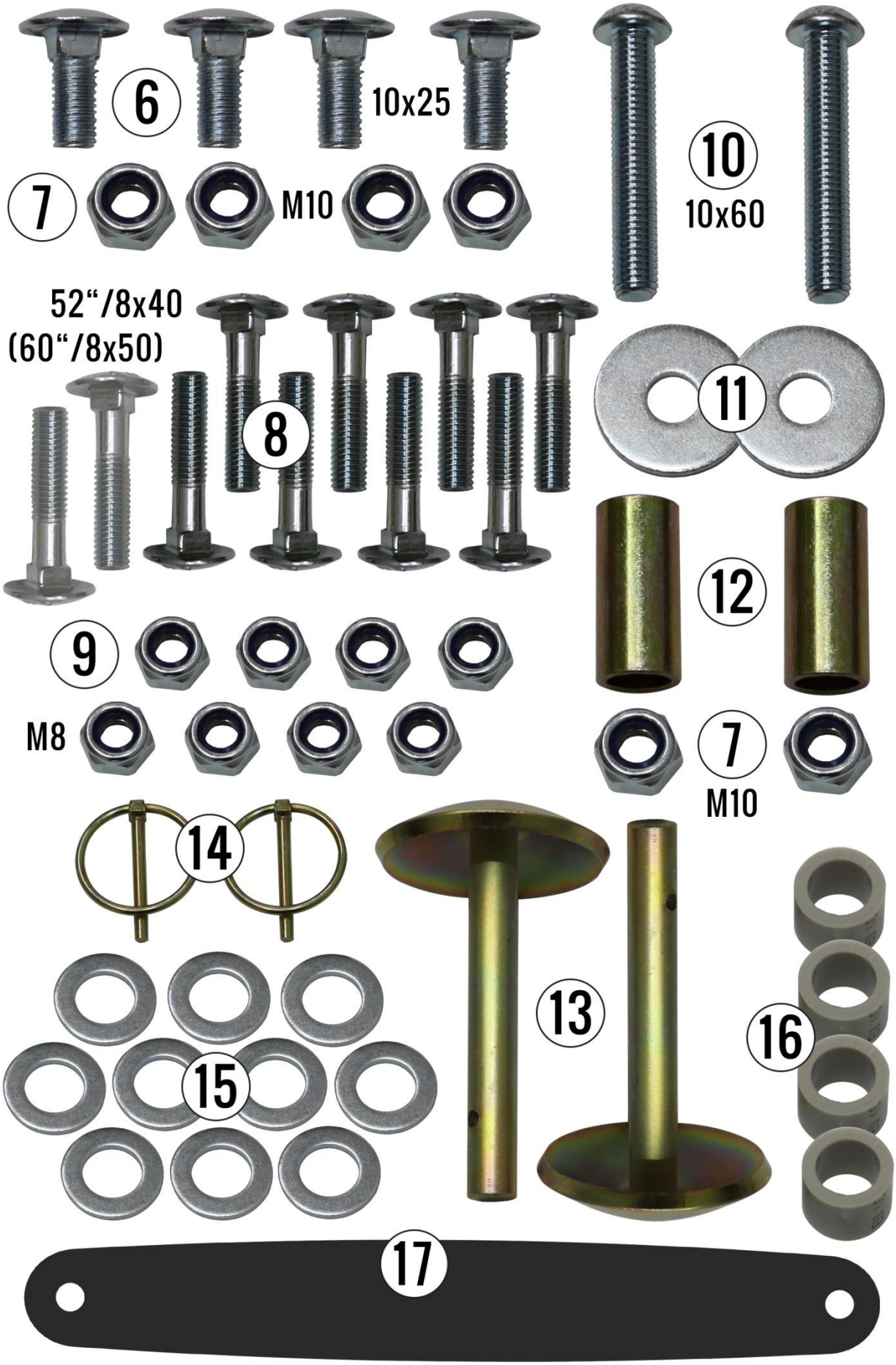

1. Attach Rib (4) and Rib (5) on Angle (3) using bolts (6) and locknuts (7).

Don´t tighten the locknuts.

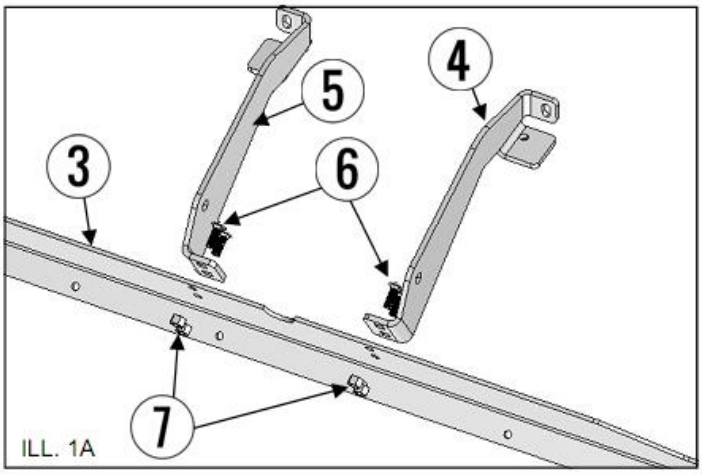

2. Attach blade (1) to Rib (4) and Rib (5) using item (12), (17), washers (11), screws (10) and locknuts (7).
Don´t tighten the locknuts.

For easy assembly torgue freely all remaining screws and locknuts. But tighten them after the blade assembly will be completed.

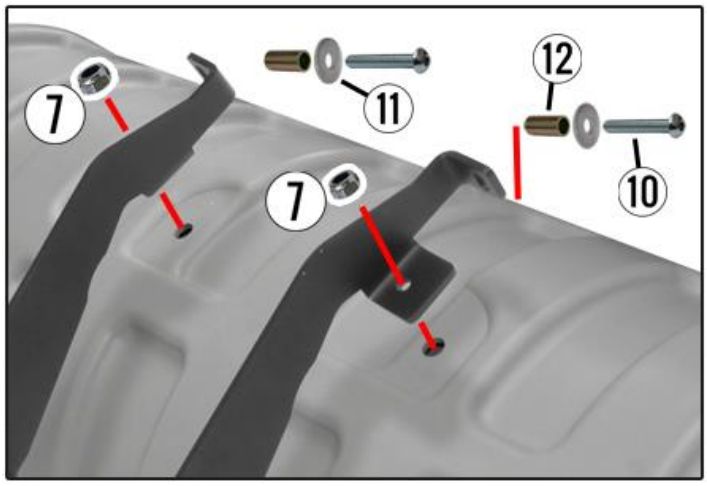

3. Place the blade assembly on its back and attach the wear bar (2) to the blade and support using 8pcs screws (8) and locknuts (9). Model 60“ - 10pcs screws (8) and locknuts (9)

After the blade is completed, tighten all screws and locknuts. All parts have to be centered, otherwise the blade will be damaged.
Now the blade is completed, you can go to install Skid Cast assembly (13).

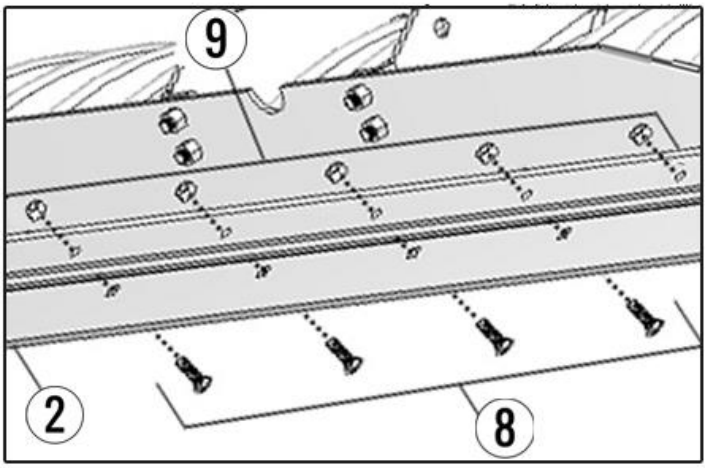

Skid Cast assembly (13) with fuse (14): 5 nuts (15) a 2 plastic rings (16) put in order according to the required edge distance from the ground. Each ATV/UTV has different ground clearance, that´s why blade angle can change. So it´s neccessary to do this after mounted snow plow with adapter. On the order of item (15, 16) doesn´t matter.

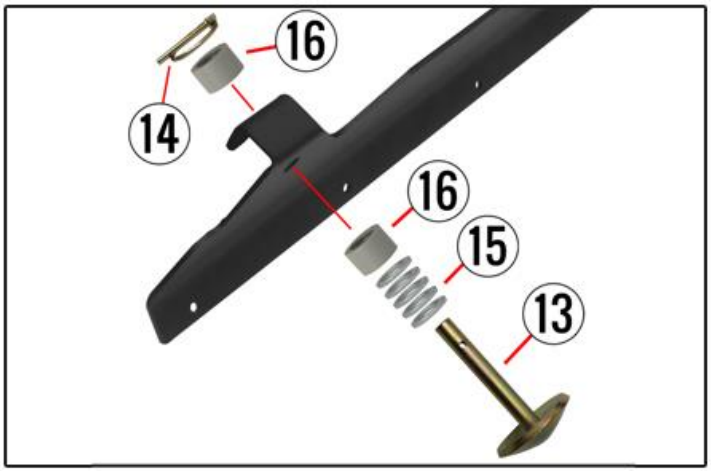

ADAPTER ASSEMBLY

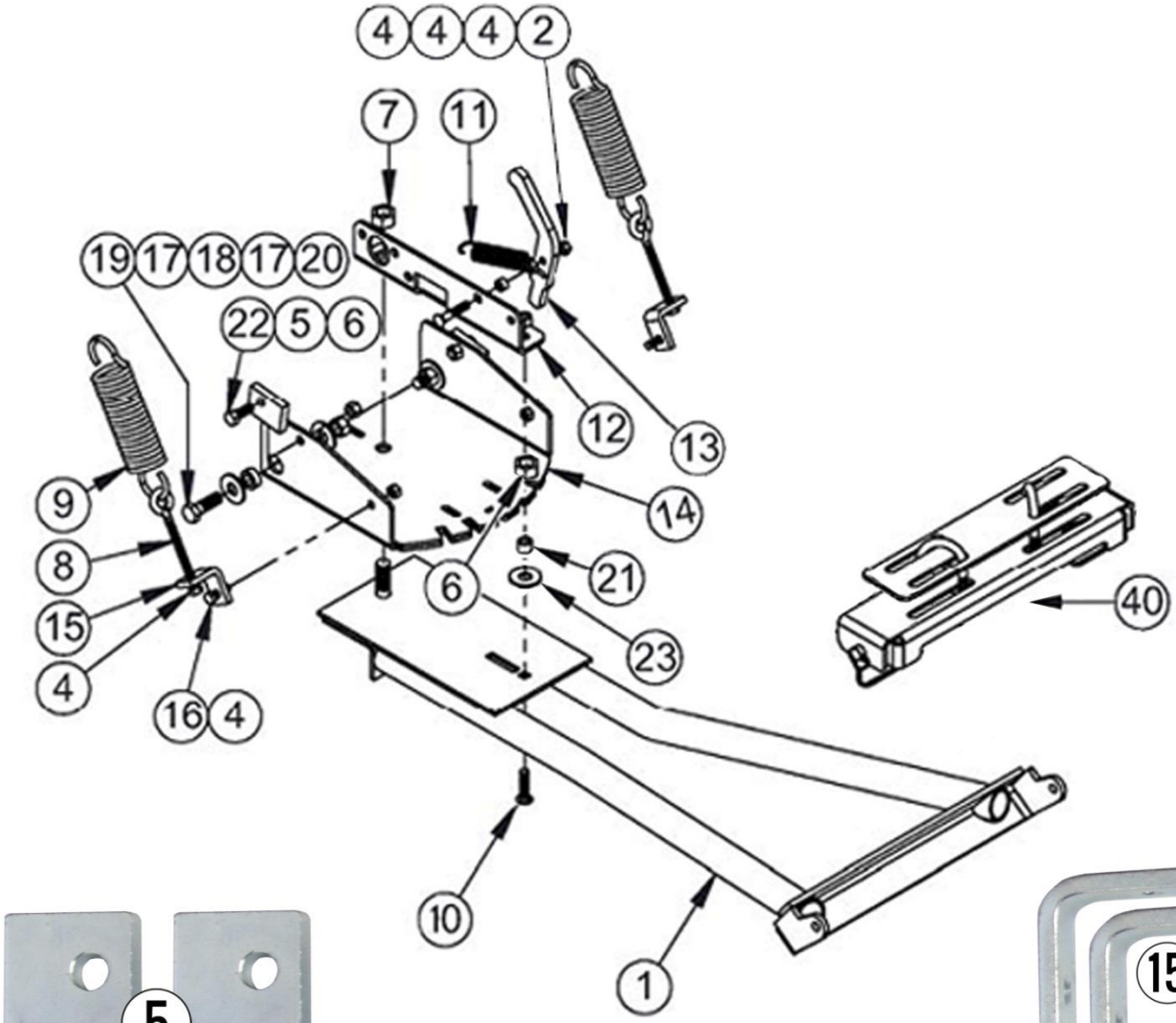



































MOUNTING KIT ASSEMBLY

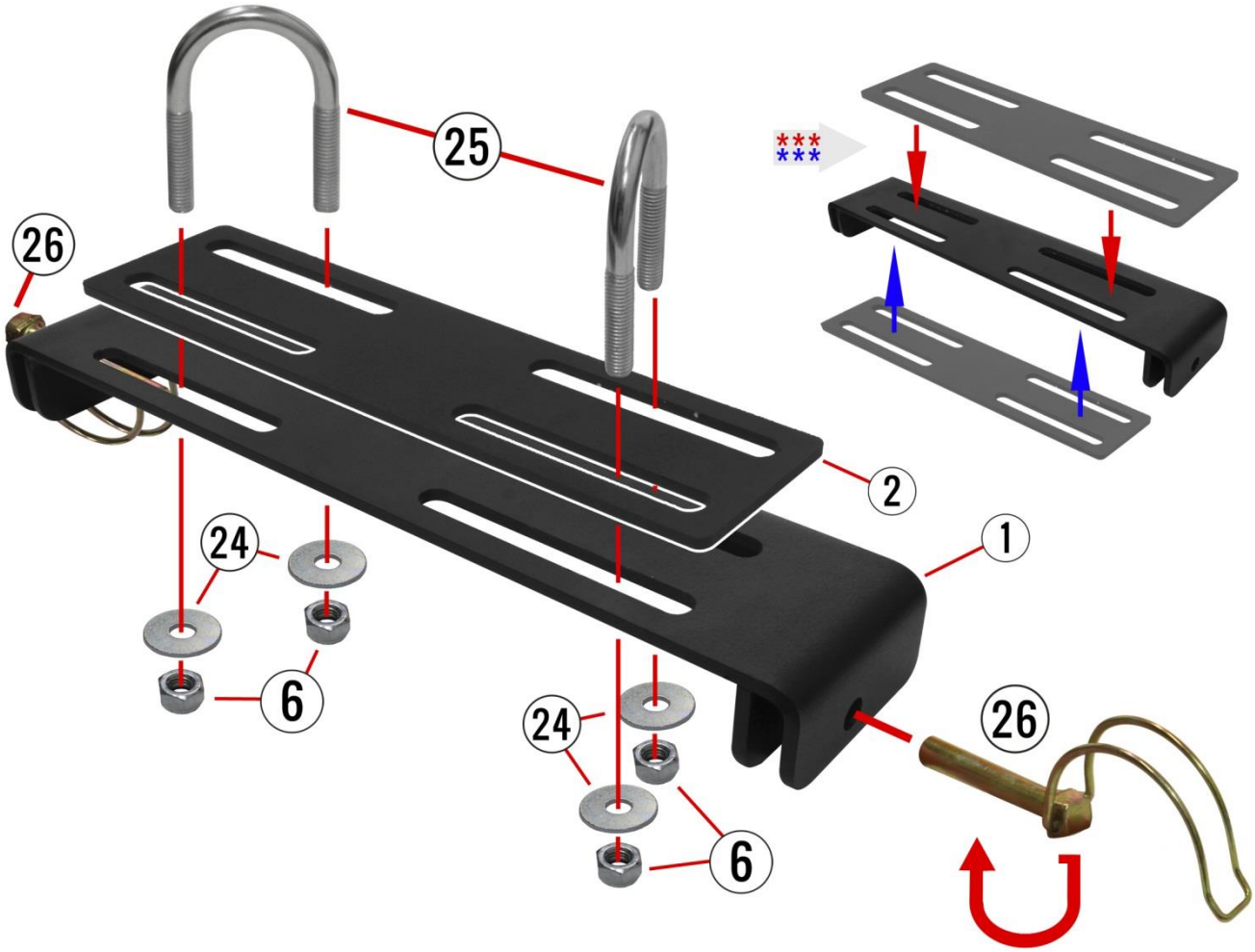

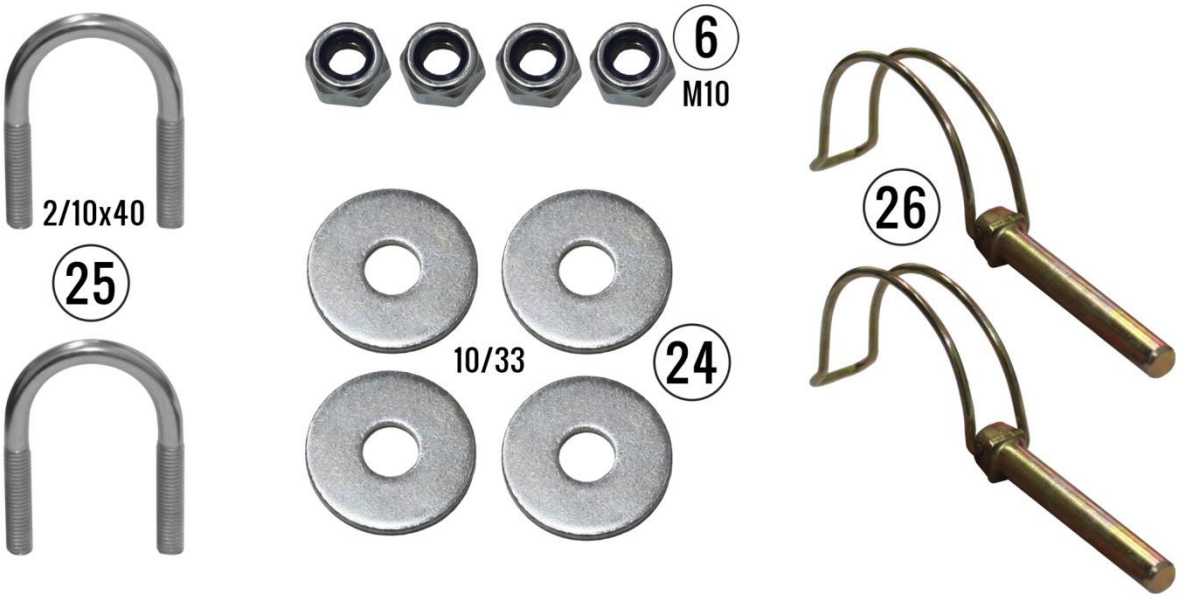

*** In case of you don´t use part number 2 of the mounting kit, we recommend to put this part under the part 1 (it´s for strengthen the construction). Item 2 put from the bottom side of item 1, then use washers 24 and tighten nuts 6.

BEFORE YOU BEGIN:

Please read and understand all instructions.
Verify all parts and tools are accounted for.
To ensure a satisfactory installation, follow all steps correctly and in the sequence described.
All directions referring to right and left are when the rider is sitting on the machine

TOOLS REQUIRED:

Basic Hand Wrench and Socket Set
Torque Wrench
Plastic Cutting Tool

INSTALLATION NOTES:

Before installing snow plow it´s neccessary to modify adapter (plastic guards or panels). It depends on type of each ATV/UTV.

NOTICE

Blade hinge parts must pivot - See Illustration and notes

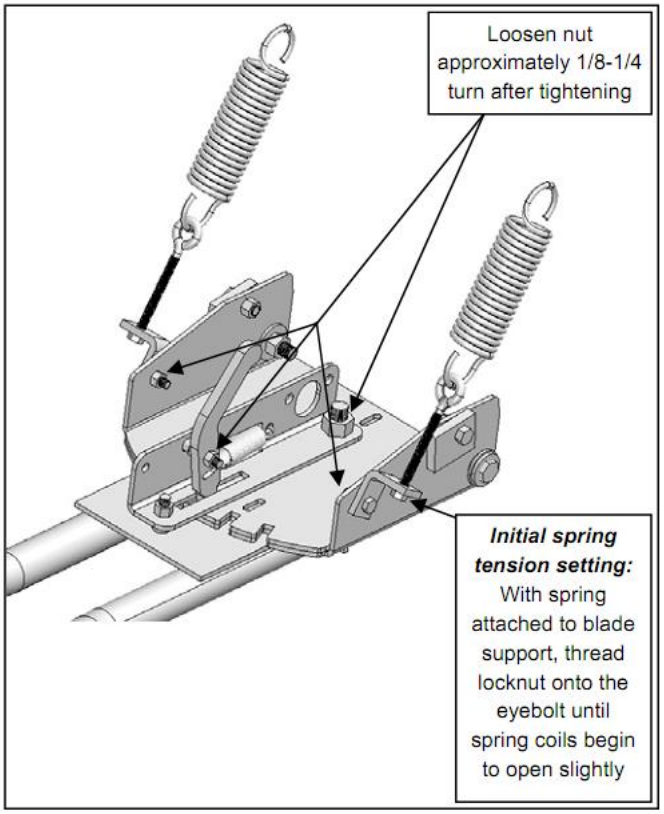

POSSIBILITIES FOR ADAPTER ATTACH

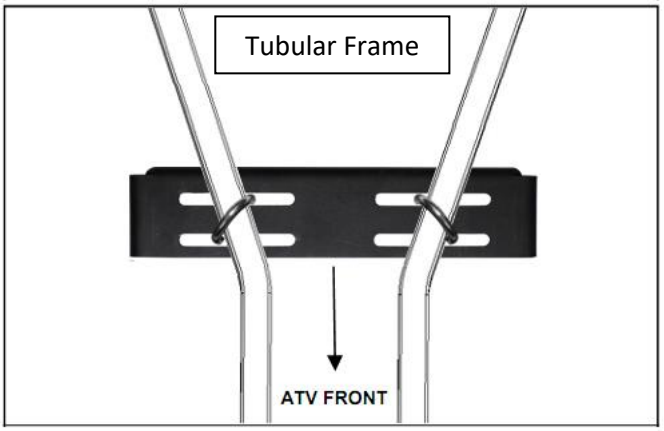

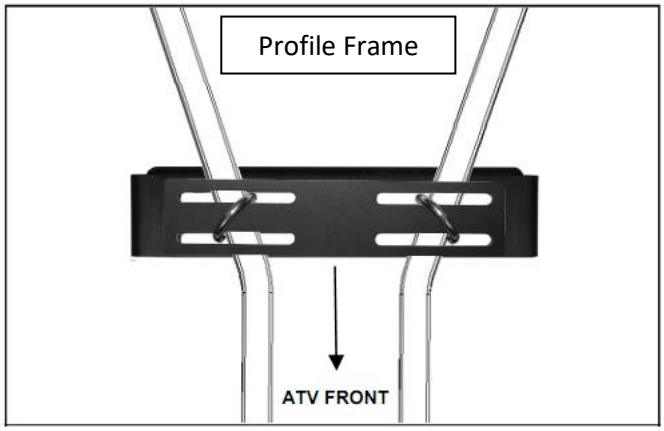

ADAPTER ASSEMBLY

1. Assemble the lever bracket as shown in picture 2.

NOTICE
2A – Torque inside nut 4

NOTICE
2B – Tighten outside nut 4, then back out 1/8 – 1/4 turn to allow lever, item 13 to pivot freely.

NOTICE
2B – Lever can be installed in either direction that offers the most clearance for operation.

NOTICE
2C – Install Lever Spring 11

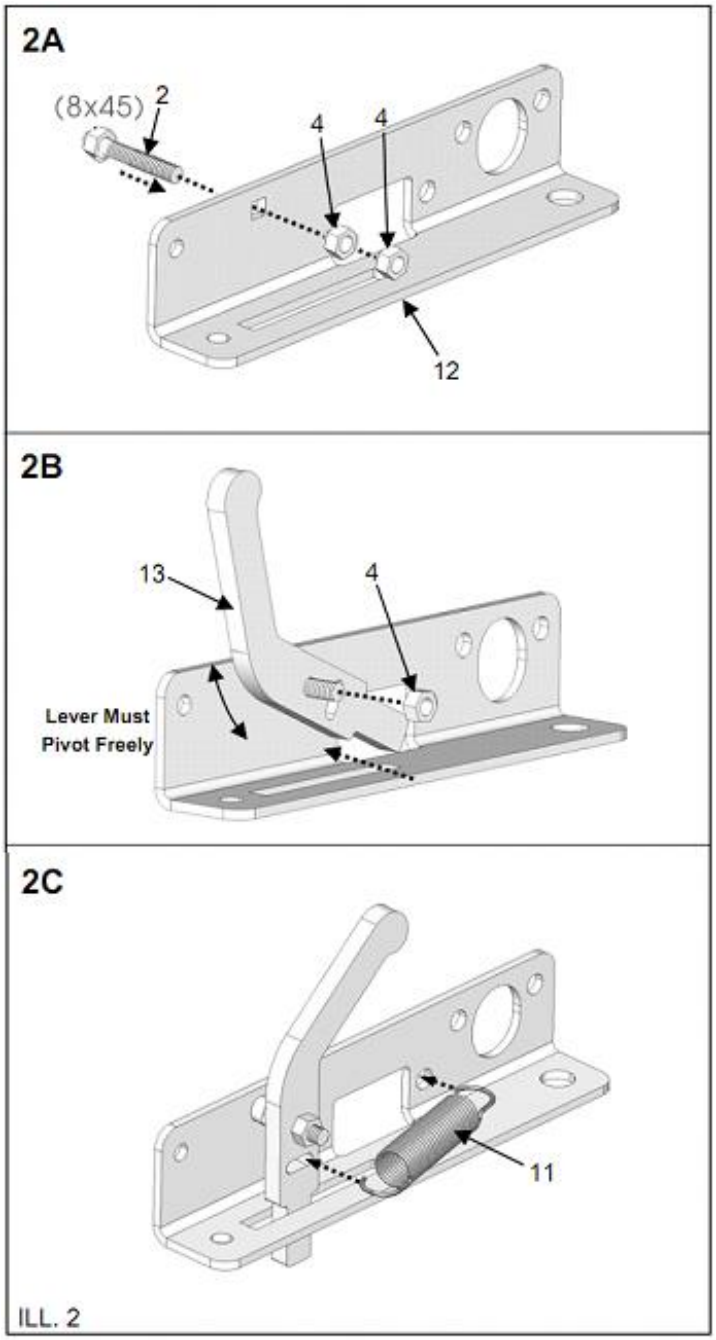

2. Place hinge Pivot Bracket 14, onto the adapter 1, as shown in picture 3.

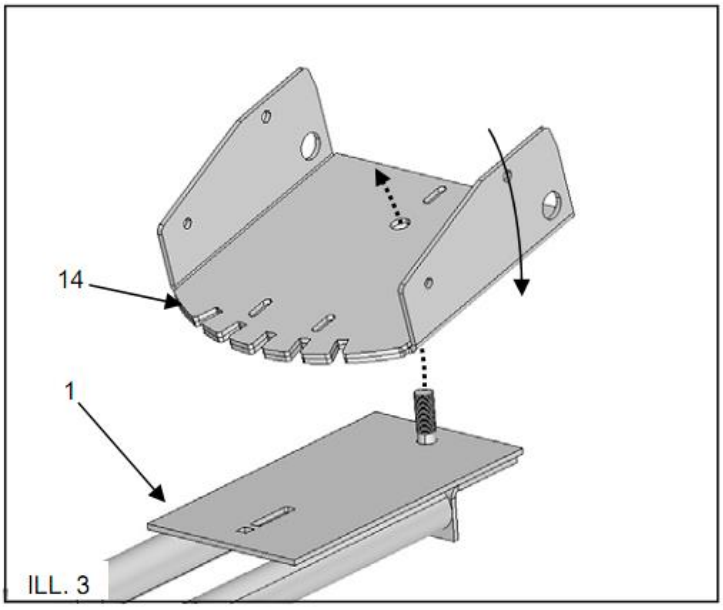

3. Place the assembled lever bracket, onto the assembled push tube and pivot hinge as shown in Illustration 4.

4. Install spacer, Item #21 and fasteners, Item #10 and #6. Torque to specification.

5. Install Locknut, Item #7. See NOTICE.

NOTICE
Tighten lock nut 7, then back out 1/8 -1/4 turn to allow blade hinge, item 14 to pivot freely.

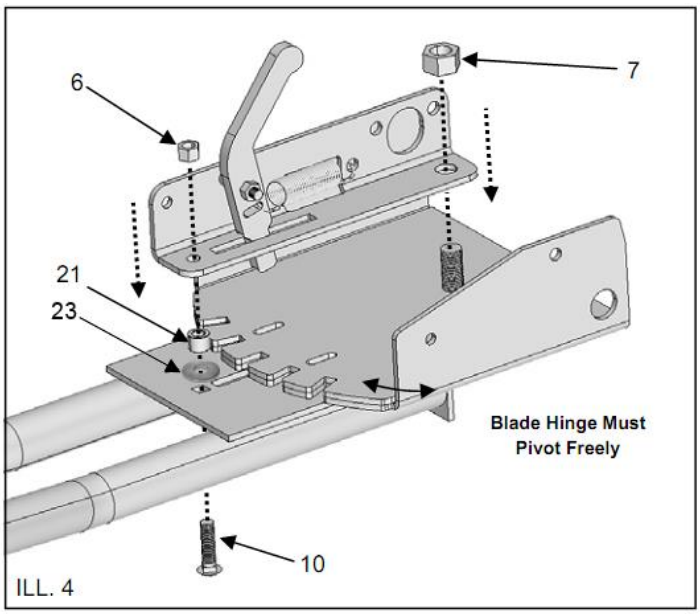

ILL. 4

6. Place bushings, Item #18 into the pivot hinge as shown. Attach the assembled push tube to a previously assembled blade. Place washers, Item #17 over the holes and fasten the push tube to the blade using bolts, Item #19 and locknuts, Item #20. See Illustration 5. Torque fasteners to specification.

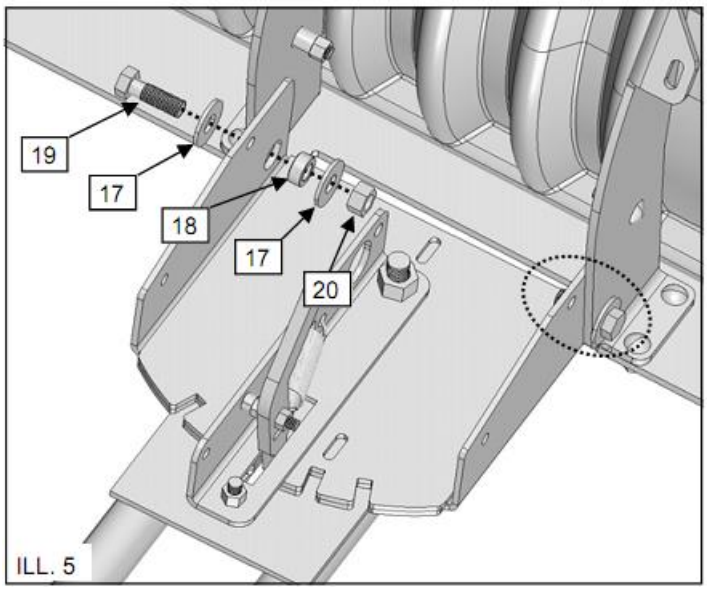

ILL. 5

7. Install the blade stops, Item #5. Fasten with bolts, Item #15 and nuts, Item #6. See Illustration 6. *Do not torque fasteners at this time..*

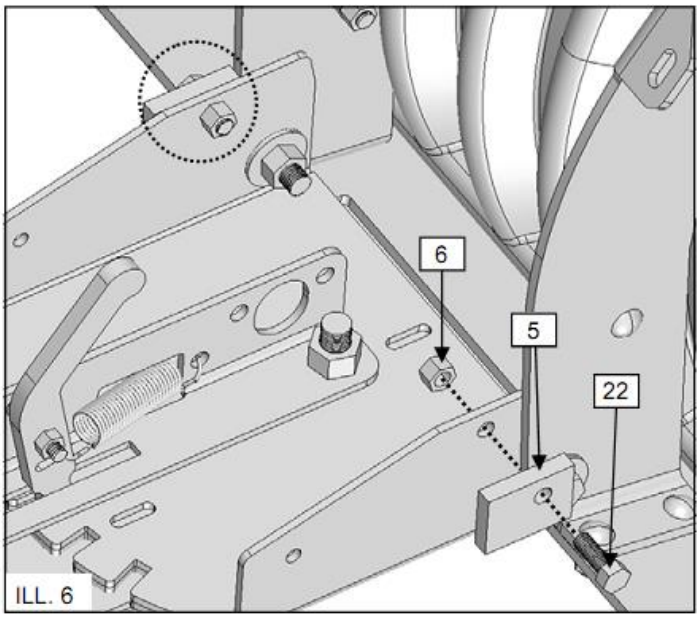

ILL. 6

8. Attach the blade spring brackets, Item #15, to the pivot bracket using bolts, Item #16 and nuts, Item #4. *Tighten #4 sufficiently, then back-off 1/8-1/4 turn to allow bracket to pivot freely.* See Illustration 7.

NOTICE
Bracket 15 must pivot freely

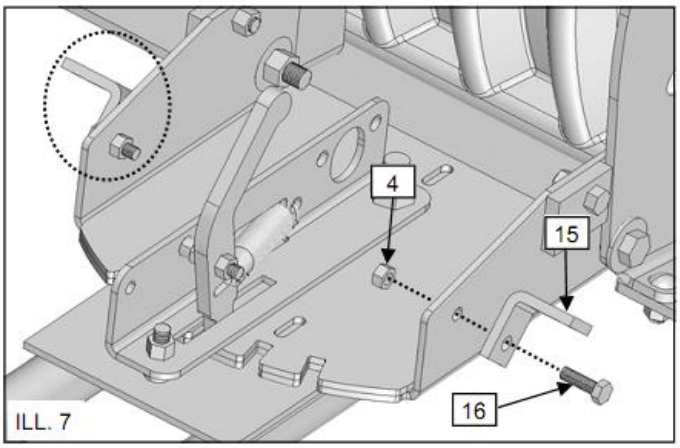

ILL. 7

9. Assemble blade springs, Item #9 and eyebolts, Item #8 between the blade assembly and spring brackets as shown in Illustration 8. Fasten and adjust tension with locknuts, Item #4..

NOTICE
Initial Blade Spring Tension: **Refer to Installation Notes**

NOTICE
Spring Hook orientation is away from blade, see picture 8

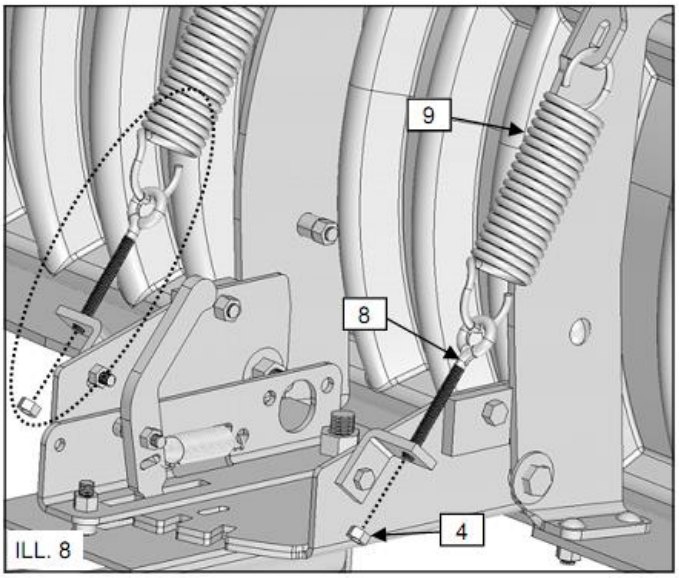

ILL. 8

10. After the plow system is mounted to the ATV, adjust the blade stops and blade spring tension as desired to achieve best performance. See Illustration 9.

NOTICE
Blade Tilt/Stop Adjustment: Perform with plow system mounted and in the down position. Blade position should be vertical for best performance.

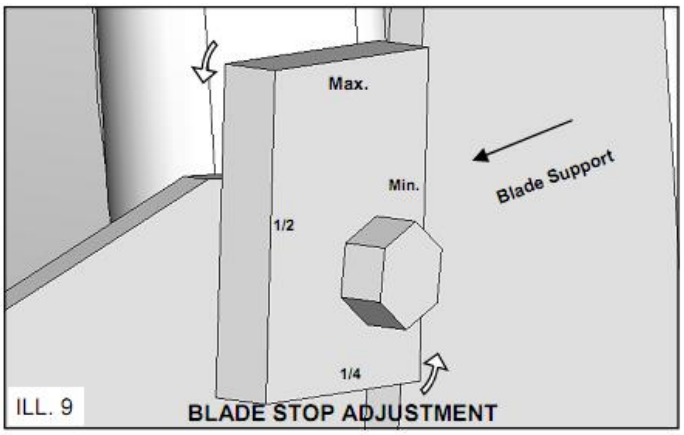

ILL. 9

11. Tighten the blade pivot fasteners to specification once the desired stop position is determined.

Official Distributor:
ASP Group s.r.o.
Staroplzenecka 290, 326 00, Letkov
Czech Republic
Tel.: +420 378 21 21 21
Email: info@aspgroup.cz
Web: www.aspgroup.eu